5 megapixel 7x Macro Zoom
Telecentric design

TEC-V7X

MEGAPIXEL

Megapixel Zoom ratio : 0.5x - 0.07x
Telecentric design at 0.25x - 0.5x
Adjustable W.D : 182mm - 577.2mm

■Zoom Ratio 7 : 1 ■Sensor : 1,1 inch (diagonal 17.4mm) ■F stop : F4.3 ■Resolution : 100 lp/mm at center and corner ■Relative Illumination rate : more than 70% ■Optical distortion : maximam 1.7%

This high performance lens incorporates 2 design functions. It operates both as a 7X macro zoom lens with 0.07X to 0.5X magnification and as a telecentric lens within the 0.25X to 0.5X magnification range. It provides excellent brightness throughout the zoom range, maintaining 70% illumination at both center and corners. Working distance is adjustable from 182_577.2mm and a F4.3-32C manual iris allows precise depth of field and contrast adjustments. The lens is suitable for cameras up to 5 megapixel resolution of 1.1inch sensor size. This combination of features provides the versatility to meet a wide range of industrial applications.

Optical Magnification		0.07X – 0.5X
Max.Image Format		12.3 mm x 12.3 mm(ϕ 17.4 mm)
Max.Aperture Ratio		1 : 4.3
Operation range	Iris	F4.3-F32
	Focus	182 mm– 577.2 mm
Control	Iris	Manual operation
	Focus	Manual operation
	Zoom	Manual operation
Operating Temperature		-10℃～50℃

Optical distortion	tele	1.1"	1.0%	1"	0.84%	2/3"	0.39%
	wide		-1.7%		-1.45%		-0.7%
BackFocal Length	tele	39.53mm					
	wide	49.78mm					
Flange Back Length		17.526 mm					
Mount		C Mount					
Filter Size		M62xP0.75					
Dimensions		ϕ 61 x 152.86mm					
Weight		1.4kg					

Optical Data

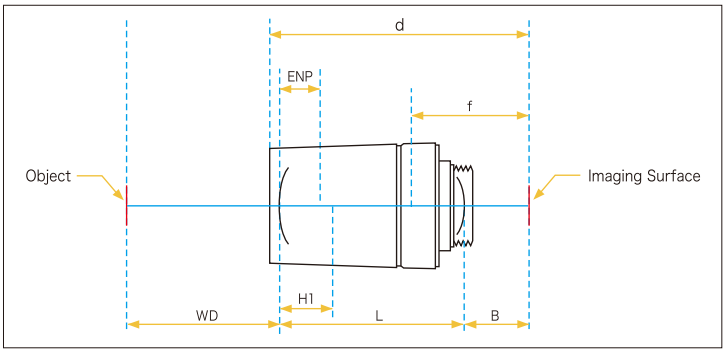

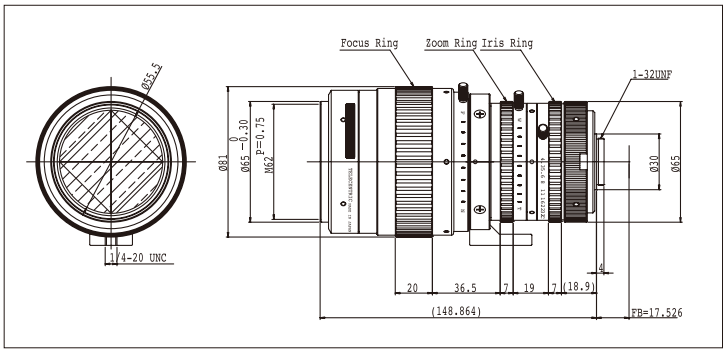

		Focal Length	First Principal Point	Total Length	Back Forcus	Entrance Pupil Diqmeter	Entrance Pupil Position	Distortion	Extension	Length
		f	H1	L	B		ENP	%		d
TEC-V7X	Tele	106.26	-136.10	122.40	39.53	53.64	375.00	1.00	-	166.39
	Wide	47.65	-143.10	112.10	49.78	11.00	126.90	-1.70	-	166.39

∗First principal point and entrance pupil position are calculated from front lens

Field of view(mm)

Working Distance (mm)		Optical Magnification	1.1 inch			1 inch			2/3 inch		
			H	V	D	H	V	D	H	V	D
182	Wide	0.2525	48.74	48.74	69.12	50.32	38.06	63.28	34.88	26.16	43.6
	Middle	0.3643	33.64	33.64	47.33	34.72	26.3	43.6	24.12	18.1	30.11
	Tele	0.5	24.6	24.6	34.75	25.4	19.246	31.88	17.65	13.26	22
200	Wide	0.2258	54.52	54.52	76.94	56.3	42.56	70.84	39	29.24	48.76
	Middle	0.3258	37.62	37.62	52.95	38.83	29.4	48.78	26.96	20.24	33.67
	Tele	0.4451	27.5	27.5	38.68	28.38	21.51	35.64	19.72	14.81	24.62
300	Wide	0.1413	87.48	87.48	124.06	90.34	68.18	114.1	62.46	46.8	78.178
	Middle	0.2037	60.24	60.24	85.34	62.18	47.06	78.18	42.15	32.38	53.898
	Tele	0.2784	44	44	61.94	45.42	34.3	57.46	31.55	23.69	39.38
400	Wide	0.1037	119.47	119.47	169.98	123.4	93.02	156.05	85.2	63.82	106.71
	Middle	0.1495	82.15	82.15	115.97	84.8	64.16	106.72	58.82	44.12	73.48
	Tele	0.2042	59.99	59.99	84.52	61.92	46.89	77.82	43	32.28	53.7
500	Wide	0.082	151.25	151.24	215.44	156.25	117.67	197.8	107.78	80.68	135.04
	Middle	0.1183	103.92	103.92	146.82	107.28	81.12	135	74.37	55.78	92.94
	Tele	0.1617	75.84	75.84	106.89	78.29	59.28	98.4	54.36	40.8	67.88
577.5	Wide	0.0708	175.21	175.21	250.66	181.4	136.35	229.82	125.08	93.62	156.76
	Middle	0.102	120.57	120.57	170.44	124.47	94.1	156.74	86.28	64.72	107.84
	Tele	0.1398	87.99	87.99	124.04	90.8	68.75	114.16	63.06	47.32	78.74

SPECIFICATIONS SUBJECT TO CHANGE WITHOUT NOTICE

CBC GROUP

Head Quarters
Image&Infomation Technology Division
2-15-13,Tsukishima, Chuo-ku, Tokyo 104-0052, Japan
Tel : +81 (0)3 3536 4594 Fax : +81 (0) 3 3536 4841
http://www.cbc.co.jp

2013. 4